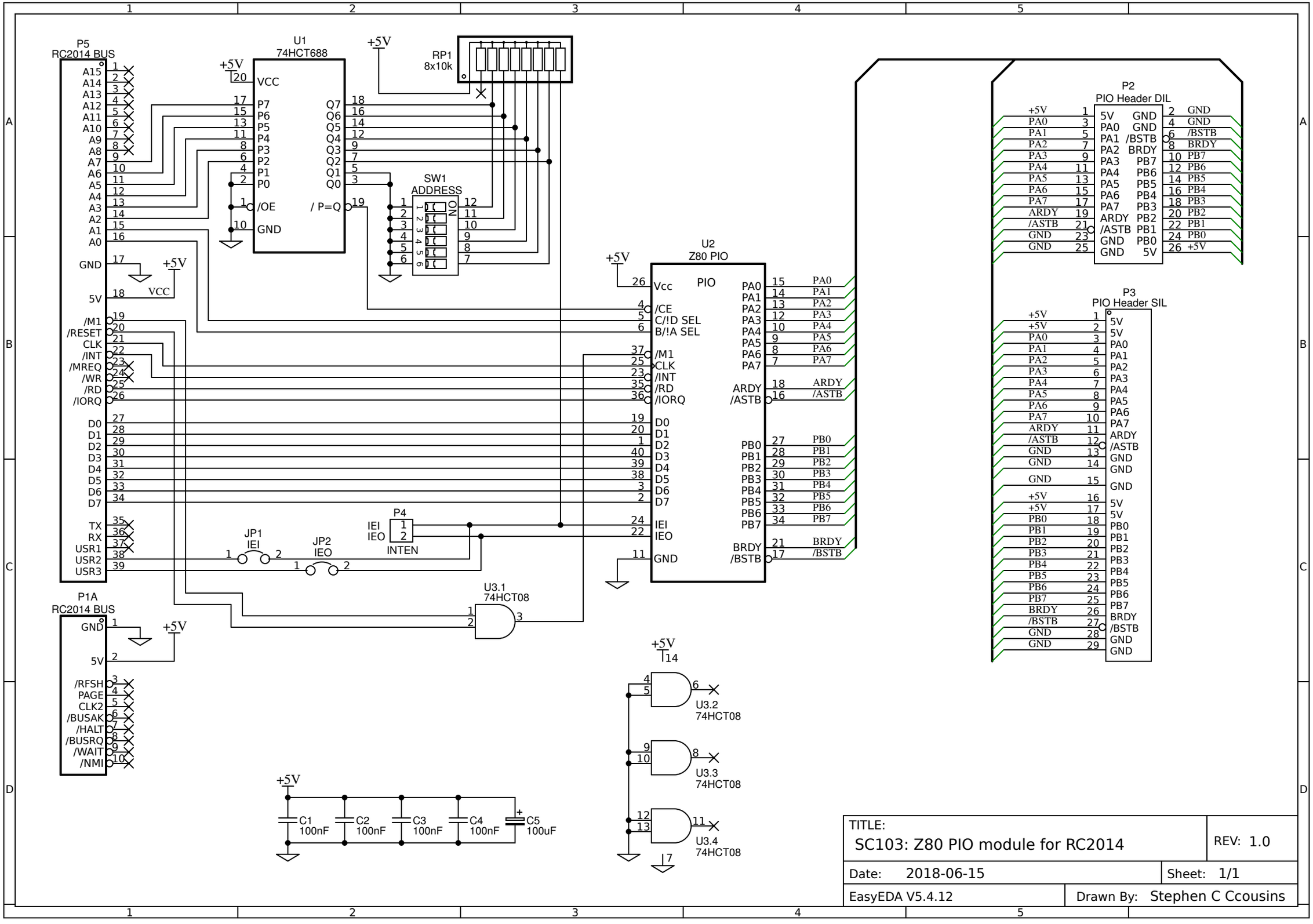
P5
RC2014 BUS
U1
74HCT688
RP1
8x10k
SW1
ADDRESS
U2
Z80 PIO
PIO
P2
PIO Header DIL
P3
PIO Header SIL
P4
INTEN
JP1
IEI
JP2
IEO
P1A
RC2014 BUS
U3.1
74HCT08
U3.2
74HCT08
U3.3
74HCT08
U3.4
74HCT08
C1
100nF
C2
100nF
C3
100nF
C4
100nF
C5
100uF
+5V
VCC
GND
TITLE:
SC103: Z80 PIO module for RC2014
REV: 1.0
Date: 2018-06-15
Sheet: 1/1
EasyEDA V5.4.12
Drawn By: Stephen C Ccousins